ALGONQUIN COLLEGE | Risk Management

Machine Guarding Program

OCCUPATIONAL HEALTH & SAFETY

Revision Date: April, 2017

Definitions

Capacitance: the ability of a component or circuit to collect and store energy in the form of an electrical charge.

Device: a control designed for safeguarding at the point of operation. Devices include pressure-sensing, movable barrier, holdback or restraint, pull-back (out); two hand trip, two hand control and light barriers.

Enclosure: fixed barriers mounted on or around the machine to prevent access to the moving parts. Enclosures may be interlocked by mechanical, electrical, pneumatic or a combination of types.

Fencing: locked fence or rail enclosure that restricts access to a machine to authorized workers.

Guard: a barrier designed for hazard control at the point of operation as well as the power transmission. Guards include; die enclosures, fixed barrier, interlocked barrier, and adjustable barriers.

In-running nip hazard or Pinch point: the area, other than the point of operation, where a belt contacts a pulley, or where one or more rotating parts come together, and it is possible for a part of the body to get nipped or pinched by the moving parts.

Point of Operation: the area where work (cutting, shearing, shaping, boring) is performed on the material.

Power transmission: all components of the mechanical system which transmits energy to the part of the machine performing the work, such as flywheels, drive shaft, belt, pulley, sprockets, gears, couplings, chains, cams, spindles, cranks, and connecting rods.

Shear point; a hazardous area created

Safeguarding: any means of preventing or controlling workers from coming in contact with the moving parts of machinery or equipment that would potentially cause harm.

1. Program Overview

When using equipment with moving parts, properly guarded or locked out machines are an essential way to ensure that injuries are prevented. Locking out equipment is also an important component of protecting workers, not only when operating machinery, but when equipment is being services, maintained, and repaired.

This program identifies the various safety hazards associated with machinery, tools and the legal requirements that apply in order for affected departments to develop their own safe operating procedures specific to their equipment and practices.

2. Scope

The machine guarding program applies to all Algonquin College staff and departments, contractors (and students) who work with (at the point of operation), work in proximity to, or are exposed to equipment with reciprocating, rotating (in-running nip points), and transverse moving parts, as well as feed mechanisms and auxiliary parts of the machine, as well as equipment that cut, bend, punch, grind or shear.

3. Applicable Legislation

- The Occupational Health and Safety Act
- O. Reg. 851/90: The Industrial Regulations
- CSA Standard Z432-4 (R2014): Safeguarding of Machinery Standards
- ISO 12100:2010 Safety of Machinery- General Principles for Design- Risk Assessment and Risk Reduction
- ISO 12100:2003- Safety of Machinery- Basic Concepts, General Principles for Design Part 1: Basic Terminology, Methodology

4. Responsibilities

4.1 The Employer

- The employer is responsible for providing information, instruction and supervision to affected workers
- Ensure that safe equipment is provided and maintained in good working order
- Repair or replace damaged equipment or devices
- Ensure that equipment is adequately guarded
- Ensure that proper lock out procedures are in place and adhered to while repairing, adjusting or maintaining equipment
- Having other lock out control switches or controls in place to prevent equipment from starting

1.3 The Supervisor

- Ensure that workers operating equipment are adequately trained
- Ensure that equipment is regularly inspected and maintained, as required
- Ensure that equipment and protective devices are in place and in good working order
- Inform workers of all of the actual or potential hazards

- Provide workers with written procedures for the safe operation of equipment
- Enforce all safe operating procedures
- Ensure that workers use equipment, protective devices and personal protective equipment as required by the employer

1.4 The Worker

- Follow all safe operating procedures
- Use and operate equipment in a safe manner
- Report any damage or defect safety devices
- Do not remove or render ineffective any safety guards
- Report hazards to your Supervisor
- Use and wear protective clothing and devices as required

4.5 Contractors

- Follow the machine guarding and lock out procedures
- Operate in a safe manner
- Report to the Project Manager, all actual or potential hazards and injuries

1.5 Project Managers

- Ensure that contractors are made aware of the College's procedures regarding machine guarding and lock out
- Ensure that contractors understand and follow the machine guarding and lock out procedures

1.6 Occupational Health and Safety

- Provide guidance and consultation regarding machine safety
- Assist with the coordination of training
- Update and maintain this Program

5. Injuries from Exposure to Moving Parts/ Machinery

Injuries from working with and around machinery include crushing, amputations, burns, lacerations and electric shock. It is important to ensure that machines are properly guarded in order to protect workers from moving machinery, machine parts and flying objects. It is just as essential to understand the main movements or releases that machines perform in order to be fully aware of the hazards. They can include:

- Moving parts
- Flying objects and projectiles
- Electricity
- Heat & cold
- Gas or liquid under pressure
- Materials, chemicals, or other substances

Moving parts have the potential to cause severe injuries, such as crushed hands and fingers, amputations, burns, broke bones, and blindness. Guards are an essential way to protect workers from injuries. Any machine, function or process that may expose a worker to a moving

part must be adequately guarded. Equipment should be inspected and properly maintained to ensure that guards are properly installed and in good working order.

6. Hazardous Motions and Actions

6.1 Rotation

Rotating parts of the machine create nip points that can grip clothing, jewelry, appendages (hands, arms, and legs), hair, and other dangling objects. The item that is gripped can be dragged into the machine, causing further damage or severe injury. For example, a lathe. Flywheel, wheels, centrifuges, conveyors, drills.

6.2 Reciprocating

Reciprocating motions are hazardous during the back-and-forth or up-and-down motions as a worker could get become struck by or caught between a moving and a stationary part. For example, a forming machine.

A worker struck by a forming machine

6.3 Transverse Motion

Transverse motion, when equipment has parts that move in a straight, continuous line, creates a hazard because a worker could be struck by or caught in a pinch or shear point by the moving part. Example: machinery containing belts.

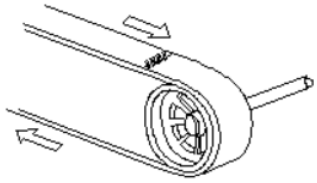

TRANSVERSE MOTION OF BELT

Example of a belt

6.4 Cutting

A cutting action may involve rotating, reciprocating, or transverse motion. The danger of cutting action exists at the point of operation, where finger, arm and body injuries can occur and where flying chips or scrap material can strike the head, particularly the eyes or face. Examples: bandsaws, circular saws, boring or drilling machines, lathes or milling machines.

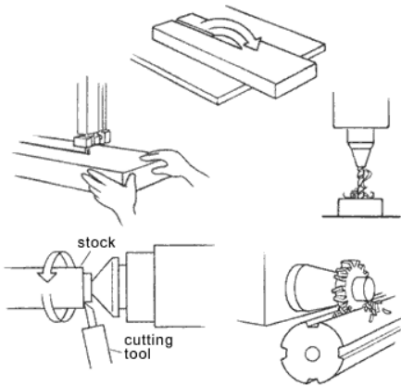

Examples of cutting action

6.5 Punching/ Bending

Punching action results when power is applied to a slide, or ram, for the purposes of blanking, drawing, or stamping metal or other materials. The danger exists at the point of operation where stock is inserted, held, and withdrawn by hand. Example: power press.

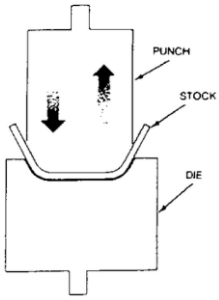

Punch press action

6.6 Shearing

Shearing action involves applying power to a slide or knife in order to trim or shear metal or other materials. The hazard exists at the point of operation where stock is held and withdrawn. Examples: mechanically, hydraulically, or pneumatically powered shears.

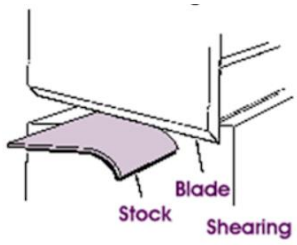

6.7 Sliding

Sliding motions that involve the movement of one part along a stationary part, or the movement of one part over another part that is moving in the opposite direction of the first part. These types of motions can entrap, cut, crush, or strike an operator. Examples of this type of equipment include a stamping press or a compactor.


Sliding Press

7. Machine Guards

Equipment that has exposed moving parts, in-running nip hazards or pinch points, has a significant potential of injuring a worker, if access to these areas is not restricted with a safety device. Guards provide a physical barrier that prevents the operator from coming into contact with the danger area (moving parts of the machinery). There are several types of barrier guards that physically prevent a worker from reaching into, around, over, under and through, or becoming drawn into/ entangled in the danger area.

7.1 Fixed Guards

Fixed guards are permanently fixed to the machine, but it is not dependent on the moving parts in order to function. It can be constructed of various materials such as sheet metal, screen, wire cloth, bards, or plastic, or any other material that is substantial enough to withstand regular

impact over prolonged usage. This type of guard is preferred, where practical, due to its relative simplicity and difficulty bypassing it.

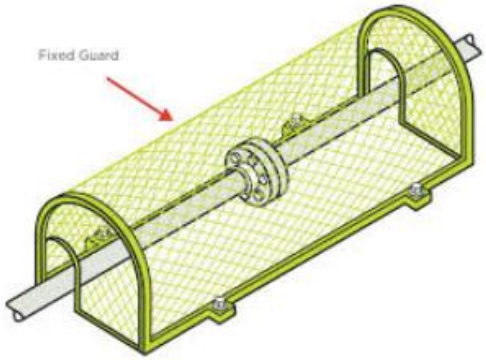

Some fixed guards can be manually set into position before commencing work. These types of fixed guards are called ***adjustable guards***. Adjustable guards provide a barrier but can be adjusted to facilitate a variety of production operations. Equipment that typically have adjustable guards include band saws, power presses, grinders, and routers.

Other types of adjustable fixed guards include ***self-adjusting guards***. These types of guards will continue to prevent access to the moving parts of the machinery but will adjust to the size of stock entering the danger zone and can be constructed to suit a variety of specific applications.

Equipment such as radial arm saws, table saws, circular saws, routers, and jointers have self-adjusting guards.

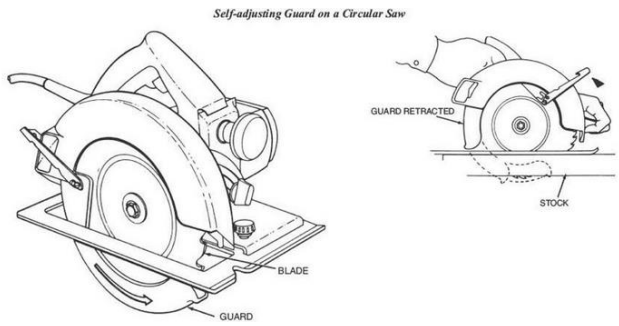

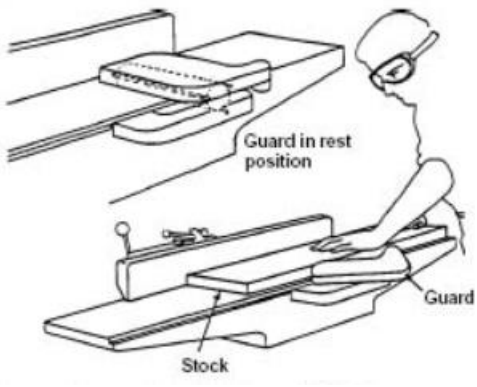

Circular saw ***Table saw***

7.1.1 Limitations

Although fixed guards are the preferred barrier method between the worker and the moving machinery, they do have limitations.

7.1.1.1 Limitation of Fixed guards

- They can interfere with visibility
- Can be limited to specific operations
- In order to repair or perform routine maintenance, the guard often has to be removed, thereby requiring lock out or another means of protection

7.1.1.2 Limitations of Adjustable and Self-Adjusting Guards

- When using adjustable guards, the hands may enter the danger area, therefore protection is not complete at all times
- They may require frequent maintenance and/ or adjustment
- Can be rendered ineffective by the operator
- May interfere with visibility

7.2 Interlocked Guards

Interlock guards automatically shut off power or disengages the machine when the guard is opened or removed, by tripping the mechanism. The moving parts will stop and the machine cannot continue to cycle or be started until the guard in put back in place. An interlock device can be mechanical, electrical, hydraulic, or pneumatic power, or any combination of these. Replacing the guard should not automatically restart the equipment, instead all guards should be interlocked and the machine restarted manually once the guard(s) is in place. This type of guarding mechanism, when used and properly maintained, can provide maximum protection. It also allows access to the machine when removing jams, without time consuming removal of a fixed guard.

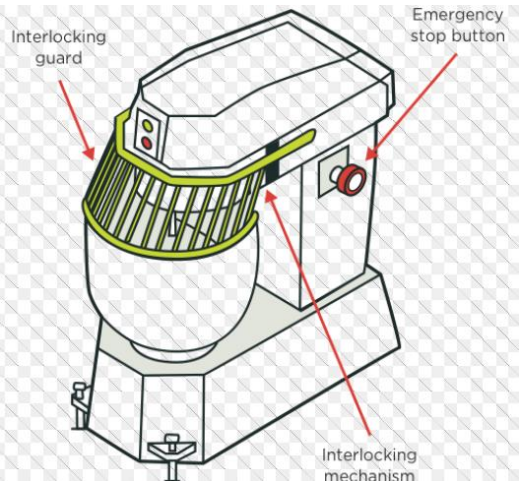

Industrial dough mixer

Commonly, we see an "interlock" as simply a safety method that relies on an electromechanical switch (like a limit or magnetic switch) to perform the interlock feature; however, modern interlocking mechanisms may take the form of other sensors and actuators. Many interlock devices currently have multipole magnetic switches, unique-shaped key switches, and hidden features buried within structural components.

The single-beam light curtain at the bottom of a garage door, for example, acts as an interlock to reverse the door so it can't close on a child or animal. The deadman control on a modern snow thrower acts as an interlock by placing the snow thrower in a safe condition (engine off or blade brake on) when the user leaves the controls to reach into the discharge chute. A light curtain, a captured lever device, and a thermocouple are examples of interlock sensors and actuators.

7.2.1 Limitations

- Requires careful adjustment and maintenance
- May be easy to disengage

7.2.2 Gates

A gate is a moveable barrier that protects the operator at the point of operation before the machine cycle can be started. Gates are designed to be operated with each machine cycle. To be effective, the gate must be interlocked so that the machine will not begin a cycle unless the gate guard is in place. It must be in the closed position before the machine can function. If the gate is not permitted to descend to the fully closed position, the machine will not function. This type of device is typically found on a press.

7.2.2.1 Limitations

A gate may require frequent inspection and regular maintenance, and it may interfere with the operator's ability to fully see their work.

7.3 Presence-sending Devices

7.3.1 Photoelectric (optical)

Presence-sensing device that uses a system of light sources and controls which can interrupt the machine's operating cycle. When the field is broken, the machine stops and will not cycle. The device must be used only on machines which can be stopped before the operator can reach the danger area. The design and placement of the guard depends on the time it takes to stop the mechanism and the speed at which the operator's hand can reach across the distance from the guard to the hazardous area.

This type of safety device allows the operator a freer range of movement while operating the device, and is easy to use. It can be used by multiple users and has bypass protection, and requires no adjustment. These types of devices are commonly found on certain types of presses for example.

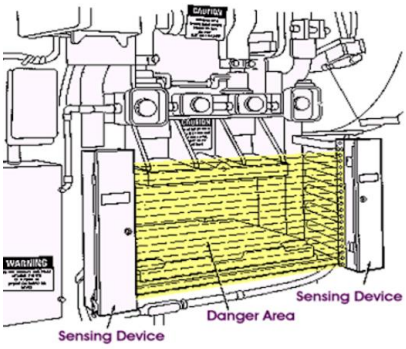

Power press equipped with a photoelectric device

7.3.1.1 Limitations

- It does not protect against mechanical failure
- It is limited to machines that can be stopped

7.3.2 Radiofrequency

This presence-sending device uses a radio beam that is part of the machine control circuit. When the capacitance field is broken by any part of the operator's body during the cycling process, the machine will stop or not activate. This too is only used on machines which can be stopped before the operator can the hazardous area, and as such must be equipped with a reliable means for stopping such as a friction clutch.

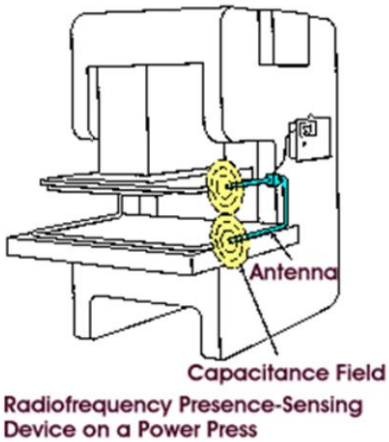

Power press with radiofrequency presence-sensing device

7.3.2.1 Limitations

- It does not protect against mechanical failure
- The antennae sensitivity must be properly adjusted and maintained for proper functioning
- It is limited to machines that can be stopped before the operator can access the hazardous area

7.3.3 Electromechanical

Electromechanical presence-sensing devices have probes or contact bars which descend to a predetermined distance when the operator initiates the machine cycle. If there is an obstruction preventing it from descending its full predetermined distance, the control circuit prevents the machine from cycling.

7.3.3.1 Limitations

- The contact bar must be adjusted properly for each application; his adjustment must be maintained properly

7.4 Restraint

The restraint, or hold-back, device uses cables or straps that are attached to the operator's hands and a fixed point. The cables or straps must be adjusted to let the operator's hands travel within a predetermined safe area. There is no extending or retracting action involved. Consequently, hand-feeding tools are often necessary if the operation involves placing material into the hazardous area. The advantages of this type of device is that there is little risk of mechanical failure.

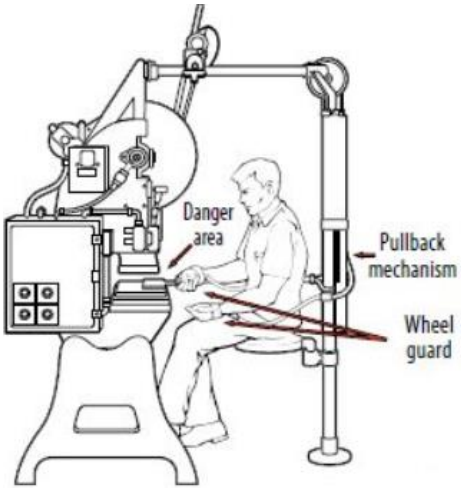

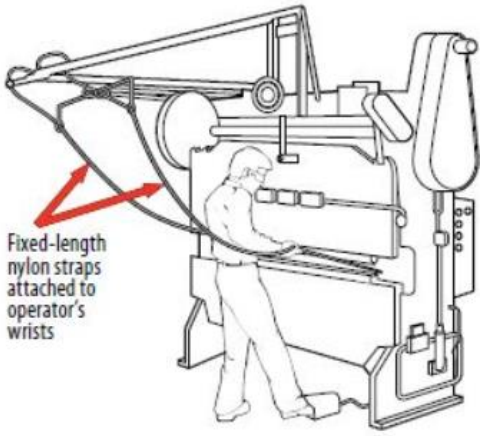

7.4.1 Limitations

This type of safety device limits the movement of the operator and can obstruct the workspace, which can lead to the creation of other hazards. The restraint device must be adjusted for each specific operation and each individual so it can be time consuming and tedious. Proper and close supervision is required when a restrain device is used.

7.5 Safety Controls

7.5.1 Safety Trip Control

Safety trip controls provide a quick means for deactivating a machine in the event of an emergency. A pressure sensitive body bar, when depressed, will deactivate the machine. If the operator or anyone, trips, loses their balance or is drawn toward the machine, applying pressure to the bar will stop its operation. The positioning of the bar is crucial; it must be positioned so that the machine is able to be stopped before a part of the employee's body reaches the danger area.

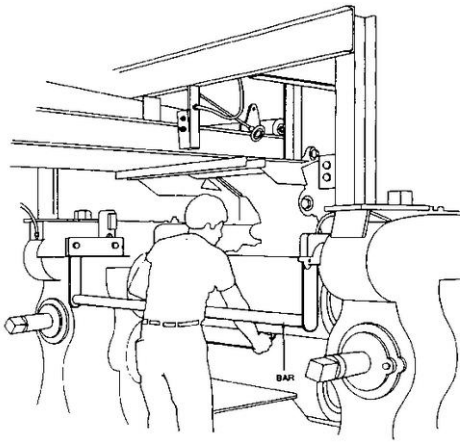

7.5.1.1 Limitations

All controls must be manually activated so proper use is essential for optimal performance. Before using the equipment, it is important to ensure that the pressure bar is in the proper location, to ensure that it can be activated in the event of an emergency. In addition, depending on the equipment, it may require special fixtures to hold what is being worked on. In addition, it may require a machine brake.

7.5.2 Two-Hand Control

The two-hand control requires constant, concurrent pressure by the operator to activate the machine. This kind of control requires a part-revolution clutch, brake, and a brake monitor, if used on a power press. This type of device requires the operator's hands to be in a safe location (on control buttons) and at a safe distance from the danger area while the machine completes its closing cycle.

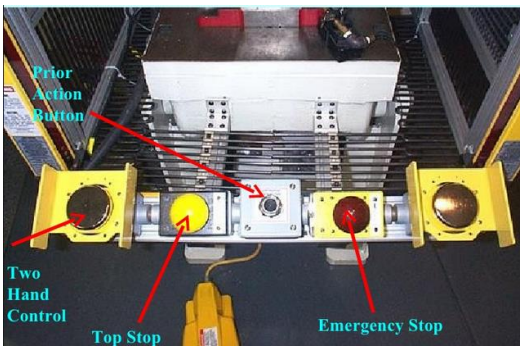

7.5.2.1 Limitations

In order to use this type of safety device, it requires a partial cycle machine with a brake. This type of device can be bypassed; some two-handed controls can rendered unsafe by holding with an arm or blocking, thereby permitting one-hand operation.

7.5.3 Two-Hand Trip

The two-handed trip, similar to the two-hand control, requires concurrent application of both the operator's hands to activate the machine cycle, after which the hands are free. This device is usually used with machines equipped with full-revolution clutches. The trips must be placed far enough from the point of operation to make it impossible for the operator to move his hands from the trip buttons or handles into the point of operation before the first half of the cycle is completed. The distance from the trip button depends upon the speed of the cycle and the band speed constant. This will allow the operator's hand to be kept far enough away to prevent them from being placed in the danger area prior to the slide/ ram or blade reaching the full 'down' position. To be effective, both two-hand controls and trips must be located so that the operator cannot use two hands or one hand and another part of his/ her body to trip the machine.

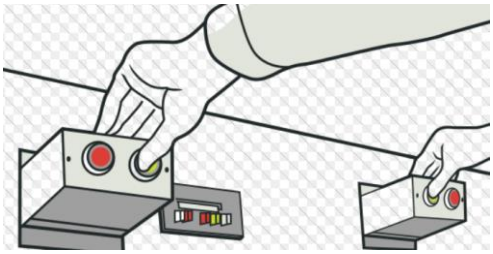

7.5.3.1 Limitations

The operator may try to reach into the danger area after tripping the machine is the main concern with this device, as there is nothing preventing this from occurring. This type of bypassed. The trip can be held down with an arm or blocking, allowing one-hand operation.

8. Other Methods of Safeguarding Machines

8.1 Table: Other Methods of Safeguarding Machines

Method	Safeguarding Principle	Examples	Considerations
Emergency Stop Devices	Designed to be used to react to an incident or hazardous situation	Emergency stop button, rope pulls, cable-pulls	Do not prevent operator exposure to machine hazards; they initiate an action to stop hazardous motion
Location/ Distance	Dangerous parts of machinery should be positioned so that they are not accessible to workers during normal operation.	• Placement of machine's power apparatus against wall. • Fencing off access to automatic machines. • Feeding long stock into machine.	Not always feasible, particularly on non-automatic machines.
Automatic Feeding and Ejection Methods	Operator is not required to place his	• Self-feeder planers. • Sanders. • Lathes.	Malfunctioning can create a hazard.

	or her hands in the danger area.		Controls should be set at a distance.
Prevent Accidental Startup	Controls shrouded or recessed.	Standard on many machines.	Off switch should be easily accessible, and operator should be able to operate machine with ease.
Miscellaneous	Hazardous part of the machine automatically retracts after the operation is complete.	Counterweight/stroking mechanisms that returns the blade to resting position after stock has been cut on over-head swing and radial saws.	Improperly adjusted counterweights can create a hazard. The blade may travel in the wrong direction or may fail to retract.
Placement of Controls	Place controls sufficiently far from the point of operation to prevent reaching into the point of operation.	Two-hand controls sit at a distance from the point of operation.	Stopping time of the machine is a factor in calculating the distance.
Administrative Controls	Control through training, supervision and procedures, including lock-out.	Ensuring workers receive proper training and observe them operating equipment safely.	Training must include hands-on demonstrations and observing operators operating equipment as per the training.

9. Training, Inspection and Maintenance

Before operators are permitted to use equipment, they must be properly trained, provided with the appropriate PPE, and the equipment inspected. Before a worker is permitted to operate any machinery, training on the safe use, operation are required. Workers need to be made aware of all hazards associated with the operation of the equipment, the potential injuries, and what deficiencies to look for. Regular supervision is necessary to ensure that operators are working safely and competently.

In addition, all equipment should be properly and regularly maintained, as per the manufacturer’s instructions.

Equipment and their guards should be inspected prior to each use to ensure that all components are operational and in good working order. Inspecting and reporting problems helps to ensure that corrective action will be taken, that operators on all shifts will be made aware of any potential danger, and that any pattern of repeat problems on a particular machine can be detected and resolved, before an injury occurs. Deficiencies should be reported to a Supervisor immediately; equipment should not be used until it is in safe working order.

Inspections should be documented and records kept. Documentation should identify the machine, inspection date, problems noted, and corrective action taken. If equipment requires repairs or maintenance for safe operation, the equipment should be locked out and removed from service until it is repaired.

References:

United States Department of Labor:
https://www.osha.gov/SLTC/etools/machineguarding/devices.html

U.S. Department of Labor OHSA Office of Training and Education: Machine Guarding:
http://www.labtrain.noaa.gov/osha600/refer/menu09f.pdf

Get Safety Trained.Com: http://www.getsafetytrained.com/TRAIN/Mod55/guards.htm